Sculpted | K-13462

Touchless single-hole lavatory faucet with Insight™ sensor technology and temperature mixer, AC-powered, 0.5 gpm

Features

- 0.5 gpm (1.9 lpm) maximum flow rate
- Factory-set 30-second maximum continual run cycle
- Vandal-resistant aerator
- 24" (610 mm) flexible supply hose for easy installation
- Less drain



Sustainability

WATER-SAVING DESIGN

Available Colors/Finishes

Color tiles intended for reference only.

CP Polished Chrome
VS Vibrant Stainless

1-800-4KOHLER (1-800-456-4537)
Kohler Co. reserves the right to make revisions without notice to product specifications.
For the most current specification sheet, go to www.kohler.com USA or www.kohler.ca Canada.
10-27-2026 17:06 - US-CA

THE BOLD LOOK OF KOHLER

KOHLER. Touchless single-hole lavatory faucet with Insight™ sensor technology and temperature mixer, AC-powered, 0.5 gpm

Codes/Standards

ADA, OBC, CSA B651 compliant when installed to the specific requirements of these regulations.

ADA | CSA B651 | OBC

ASME A112.18.1/CSA B125.1
NSF/ANSI/CAN 372
DOE - Energy Policy Act 1992
ADA
ICC/ANSI A117.1
CSA B651
OBC

Technical Information

All product dimensions are nominal.

Spout

Spout Reach:	5" (127 mm)

Flow Rate

Faucet Flow Rate:	0.5 gpm (1.9 l/min)

Material

- Brass

Recommended Products/Accessories

- [object Object]23726 Drain treatment
- K-13487 4' cable assembly
- K-13602 6' cable assembly
- K-13604 10' cable assembly
- K-23723 Faucet cleaner

Required Products/Accessories

- K-13480 AC single supply, global outlets

or

- K-13480-A AC single supply, North American outlets

or

- K-13481 Multi-outlet power supply, global outlets

or

- K-13481-A Multi-outlet power supply, North American outlets

Optional Products/Accessories

- 1160595 Aerator, Medium, 0.35 Gpm
- 1075455 0.5 GPM Aerator Insert
- 1139284 Jr. Aerated 1 Gpm
- 1139285 Jr. Laminar 1 Gpm
- 1097180 1.5 GPM Aerator Insert
- 1104546 Insert, Laminar, 1.5 Gpm, Medium
- 79441 Gasket, .728 X .590 X .125
- K-13478-A 4" escutcheon plate for Insight™ and Kinesis® faucet
- K-13478-B 4" escutcheon plate for Insight™ and Kinesis® faucet
- K-13479-A 8" escutcheon plate for Insight™ and Kinesis® faucet
- K-13479-B 8" escutcheon plate for Insight™ and Kinesis® faucet
- K-7129 Bathroom sink grid drain without overflow
- K-7129-A Bathroom sink grid drain with overflow

Technology

- Requires an AC power supply
- Electronic Insight™ sensor technology for accurate and consistent activation

1-800-4KOHLER (1-800-456-4537)
Kohler Co. reserves the right to make revisions without notice to product specifications.
For the most current specification sheet, go to www.kohler.com USA or www.kohler.ca Canada.
10-27-2026 17:06 - US-CA

THE BOLD LOOK OF KOHLER.

KOHLER® Touchless single-hole lavatory faucet with Insight™ sensor technology and temperature mixer, AC-powered, 0.5 gpm

Warranty

See website for detailed warranty information.

KOHLER® One-Year Limited Warranty

1-800-4KOHLER (1-800-456-4537)
Kohler Co. reserves the right to make revisions without notice to product specifications.
For the most current specification sheet, go to www.kohler.com USA or www.kohler.ca Canada.
10-27-2026 17:06 - US-CA

THE BOLD LOOK OF KOHLER®

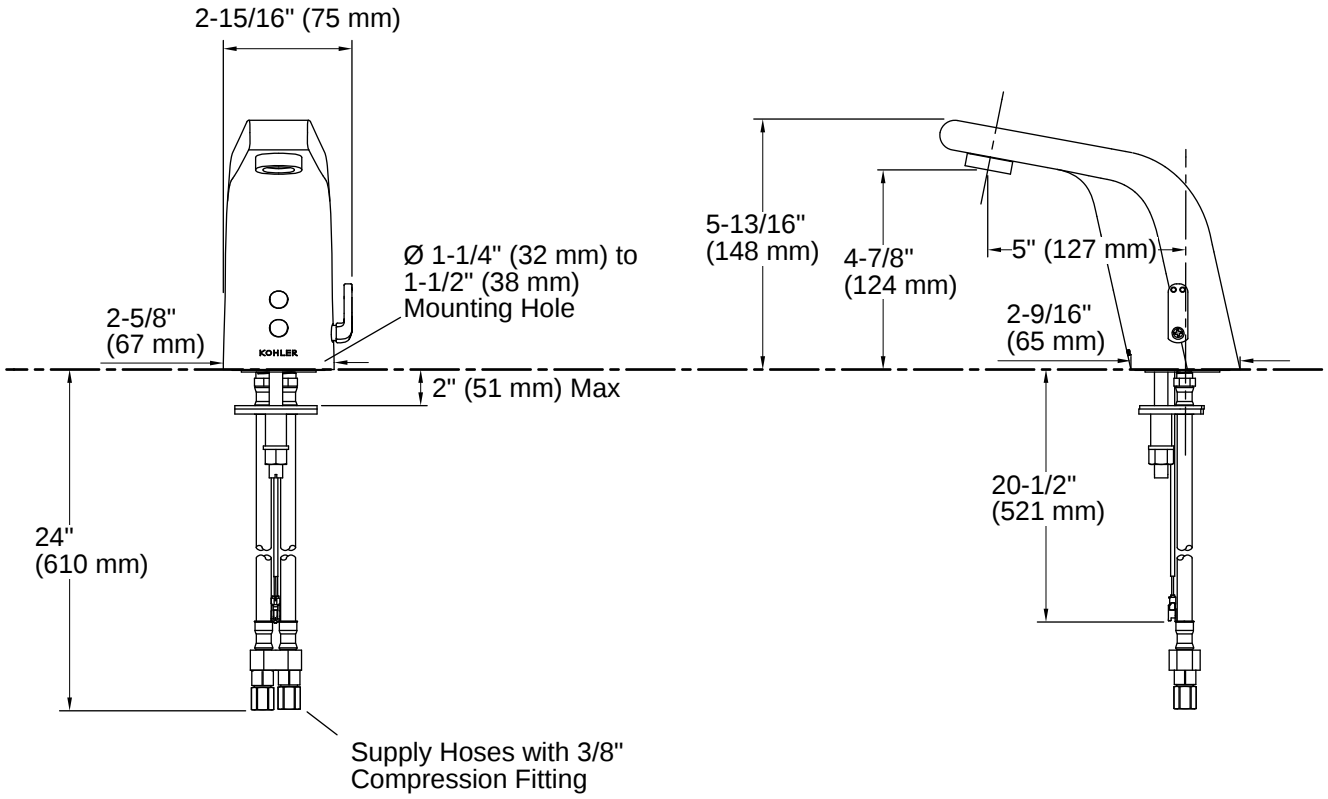

Installation

- Single-hole mounting
- Above-counter valve for easy installation and maintenance
- 13480-A and 13481-A power supplies are designed for North America outlets. For international outlets please use 13480 and 13481

Installation Notes

Install this product according to the installation instructions.

A 1-1/4" (32 mm) minimum to 1-1/2" (38 mm) maximum diameter mounting hole is required.
The minimum distance between the back of the faucet spout and the wall must be 1-3/4" (44 mm). This will allow proper clearance for setscrew access.
The maximum distance between the bathroom sink basin edge to the base of the faucet spout must be 1-3/4" (44 mm).
The maximum height of the lip basin should be 3/4" (19 mm).
Product includes rosebud spray aerator. Other aerator styles are available.
This product requires an AC power supply (not included).
ADA, OBC, CSA B651 compliant when installed to the specific requirements of these regulations.

1-800-4KOHLER (1-800-456-4537)
Kohler Co. reserves the right to make revisions without notice to product specifications.
For the most current specification sheet, go to www.kohler.com USA or www.kohler.ca Canada.
10-27-2026 17:06 - US-CA
THE BOLD LOOK OF KOHLER.