Sculpted | K-13461-SATA

Touchless single-hole lavatory faucet with Insight™ sensor technology, DC-powered, less drain, 0.35 gpm

Features

- 0.35 gpm (1.3 lpm) maximum flow rate at 60 psi (4.14 bar)
- Factory-set 30-second maximum continual run cycle
- Vandal-resistant aerator
- 24" (610 mm) flexible supply hose for easy installation
- Includes two AAA batteries
- Stationary spout
- Without temperature mixer
- Less drain



Sustainability

WATER-SAVING DESIGN

Available Colors/Finishes

Color tiles intended for reference only.

CP Polished Chrome

1-800-4KOHLER (1-800-456-4537)
Kohler Co. reserves the right to make revisions without notice to product specifications.
For the most current specification sheet, go to www.kohler.com USA or www.kohler.ca Canada.
11-16-2026 19:00 - US-CA

THE BOLD LOOK OF KOHLER

Codes/Standards

ADA, OBC, CSA B651 compliant when installed to the specific requirements of these regulations.

ADA | CSA B651 | OBC

ASME A112.18.1/CSA B125.1
NSF/ANSI/CAN 372
DOE - Energy Policy Act 1992
California Energy Commission (CEC)
ADA
ICC/ANSI A117.1
CSA B651
OBC

Technical Information

All product dimensions are nominal.

Spout

Spout Reach:	5" (127 mm)
Drain With Overflow:	[object Object]

Flow Rate

Faucet Flow Rate:	0.35 gpm (1.3 l/min)

Valves

Included Valves:	UltraGlide, Thermostatic Mixer

Material

- Brass

Warranty

See website for detailed warranty information.

KOHLER® Electronic Faucets, Valves, and Controls Five-Year Limited Warranty

1-800-4KOHLER (1-800-456-4537)
Kohler Co. reserves the right to make revisions without notice to product specifications.
For the most current specification sheet, go to www.kohler.com USA or www.kohler.ca Canada.
11-16-2026 19:00 - US-CA

THE BOLD LOOK OF KOHLER.

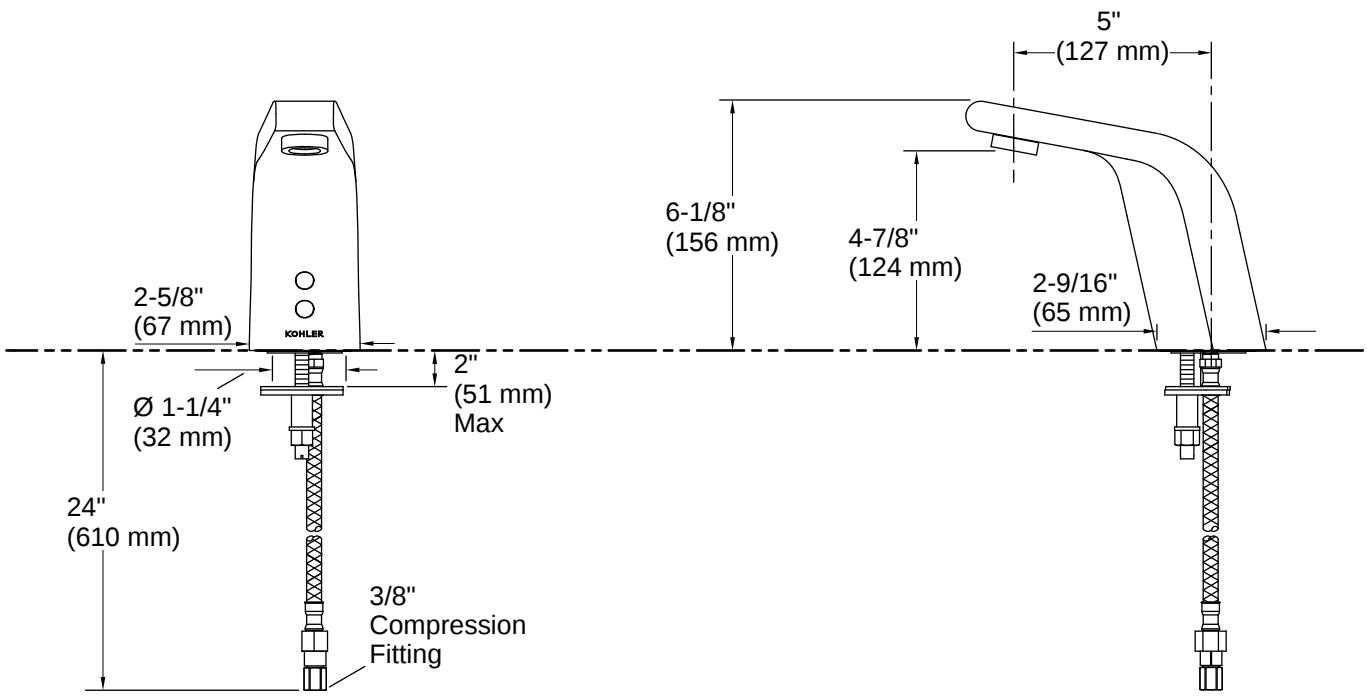

Installation

- Single-hole mounting
- Above-counter battery and valve for easy installation and maintenance

Installation Notes

Install this product according to the installation instructions.

ADA, OBC, CSA B651 compliant when installed to the specific requirements of these regulations.

1-800-4KOHLER (1-800-456-4537)
Kohler Co. reserves the right to make revisions without notice to product specifications.
For the most current specification sheet, go to www.kohler.com USA or www.kohler.ca Canada.
11-16-2026 19:00 - US-CA

THE BOLD LOOK OF KOHLER