Pinstripe® | K-13114

Toilet paper holder

Features

- Coordinates with Pinstripe faucets, accessories, and showering components to complete your bathroom



Available Colors/Finishes

Color tiles intended for reference only.

	CP	Polished Chrome
	SN	Vibrant Polished Nickel
	BN	Vibrant Brushed Nickel

1-800-4KOHLER (1-800-456-4537)
Kohler Co. reserves the right to make revisions without notice to product specifications.
For the most current specification sheet, go to www.kohler.com USA or www.kohler.ca Canada.
11-18-2026 00:09 - US-CA

Codes/Standards

None Applicable

Material

- Premium metal construction for durability and reliability
- KOHLER finishes resist corrosion and tarnishing

Recommended Products/Accessories

- K-23723 Faucet cleaner

Warranty

See website for detailed warranty information.

KOHLER® Faucet Lifetime Limited Warranty

1-800-4KOHLER (1-800-456-4537)
Kohler Co. reserves the right to make revisions without notice to product specifications.
For the most current specification sheet, go to www.kohler.com USA or www.kohler.ca Canada.
11-18-2026 00:09 - US-CA

THE BOLD LOOK OF KOHLER.

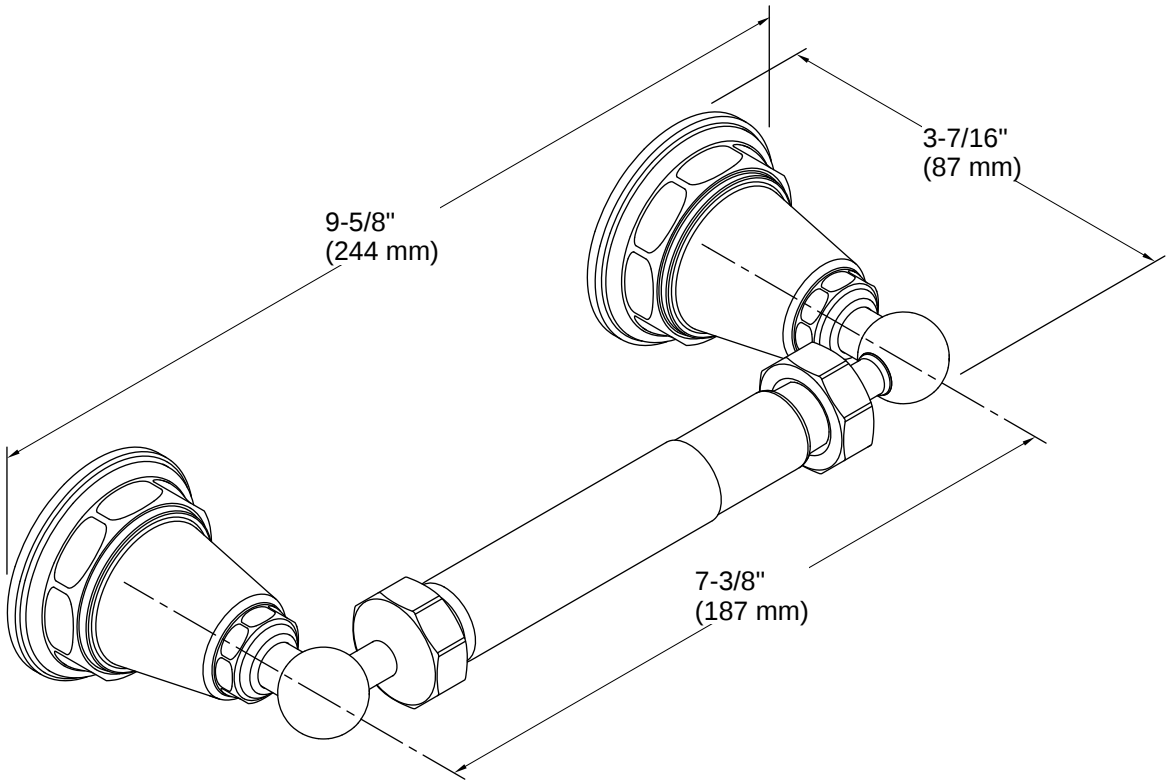

Installation

- Installation template and tools included

Installation Notes

Install this product according to the installation instructions.

1-800-4KOHLER (1-800-456-4537)
Kohler Co. reserves the right to make revisions without notice to product specifications.
For the most current specification sheet, go to www.kohler.com USA or www.kohler.ca Canada.
11-18-2026 00:09 - US-CA

THE BOLD LOOK OF KOHLER