KOHLER®

Composed® | K-124C36-SANA

Wall-mount touchless bathroom sink faucet with Kinesis® sensor technology, DC-powered

Features

- Kinesis® technology with concealed sensor allows for a clean aesthetic and provides extraordinarily accurate and reliable actuation in varying installation environments
- Below-counter valving reduces the faucet footprint and provides easier service
- Design-forward aesthetic for commercial bathroom spaces
- 0.5 gpm (1.9 lpm) maximum flow rate
- AA battery-powered; up to four-year battery life (approx. 105,000 cycles)
- On-demand usage with 30-second max. continual run cycle to prevent vandalism and save water
- Vandal-resistant aerated outlet
- 18" (457 mm) stainless steel braided flexible supply hose for easy installation
- Complies with the Safe Drinking Water Act (SDWA)



Available Colors/Finishes

Color tiles intended for reference only.

	CP	Polished Chrome
	BN	Vibrant Brushed Nickel
	BL	Matte Black

1-800-4KOHLER (1-800-456-4537)
Kohler Co. reserves the right to make revisions without notice to product specifications.
For the most current specification sheet, go to www.kohler.com USA or www.kohler.ca Canada.
11-12-2026 02:03 - US-CA

THE BOLD LOOK OF KOHLER®

Codes/Standards

ADA, OBC, CSA B651 compliant when installed to the specific requirements of these regulations.

ADA | CSA B651 | OBC

ASME A112.18.1/CSA B125.1
NSF/ANSI/CAN 372
NSF/ANSI/CAN 61
DOE - Energy Policy Act 1992
California Energy Commission (CEC)
ADA
ICC/ANSI A117.1
CSA B651
OBC

Technical Information

All product dimensions are nominal.

Spout

Spout Reach:	8-9/16" (217 mm)

Flow Rate

Faucet Flow Rate:	0.5 gpm (1.9 l/min)

Material

- Brass spout
- Cast brass valve

Included Components

- K-7129-A Bathroom sink grid drain with overflow (QTY 1)

Recommended Products/Accessories

- [object Object]23726 Drain treatment
- K-23723 Faucet cleaner

Warranty

See website for detailed warranty information.

KOHLER® One-Year Limited Warranty

1-800-4KOHLER (1-800-456-4537)
Kohler Co. reserves the right to make revisions without notice to product specifications.
For the most current specification sheet, go to www.kohler.com USA or www.kohler.ca Canada.
11-12-2026 02:03 - US-CA

THE BOLD LOOK OF KOHLER.

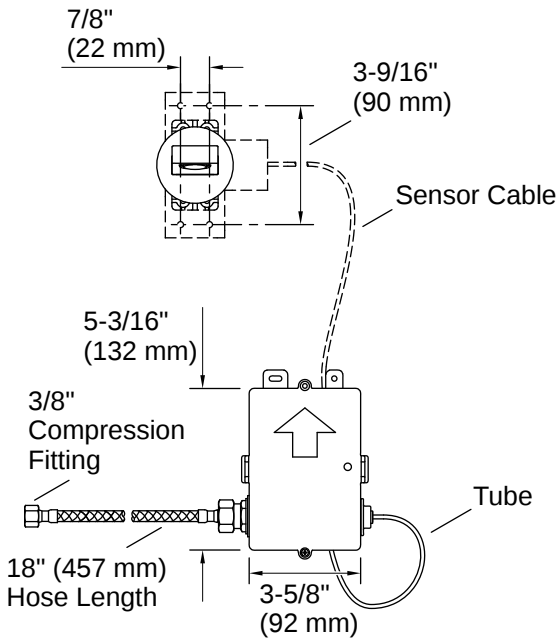

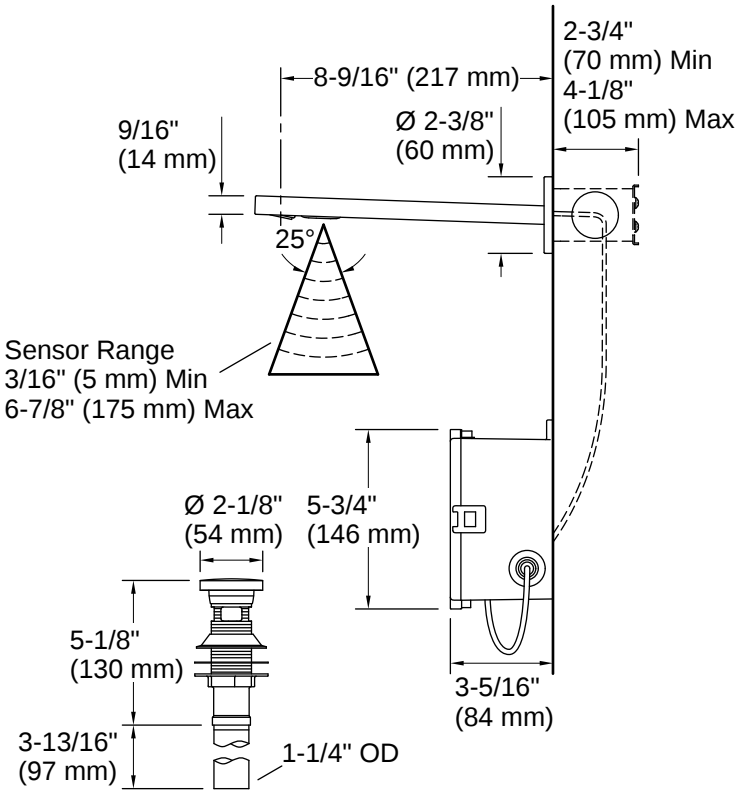

Installation

- Wall-mount

Installation Notes

Install this product according to the installation instructions.

ADA, OBC, CSA B651 compliant when installed to the specific requirements of these regulations.

1-800-4KOHLER (1-800-456-4537)
Kohler Co. reserves the right to make revisions without notice to product specifications.
For the most current specification sheet, go to www.kohler.com USA or www.kohler.ca Canada.
11-12-2026 02:03 - US-CA

THE BOLD LOOK OF KOHLER