KOHLER®

Components™ | K-123MT39-SANA

Touchless wall-mount lavatory faucet with Kinesis® sensor technology, Tube design, Cortex™-enabled, AC-powered, 0.5 gpm

Features

- Kinesis® technology with concealed sensor allows for a clean aesthetic and provides extraordinarily accurate and reliable actuation in varying installation environments
- Below-counter valving reduces the faucet footprint and provides easier service
- 0.5 gpm (1.9 lpm) maximum flow rate with vandal-resistant outlet
- On-demand usage with 30-second max. continual run cycle to prevent vandalism and save water
- 18" (457 mm) stainless steel braided flexible supply hose for easy installation
- Box includes: Spout assembly, grid drain, control box assembly, supply hose, and standard mounting hardware
- Requires single or multiple AC adapter unit (sold separately)



Sustainability

WATER-SAVING DESIGN

Available Colors/Finishes

Color tiles intended for reference only.

CP Polished Chrome

1-800-4KOHLER (1-800-456-4537)
Kohler Co. reserves the right to make revisions without notice to product specifications.
For the most current specification sheet, go to www.kohler.com USA or www.kohler.ca Canada.
11-19-2026 13:00 - US-CA

THE BOLD LOOK OF KOHLER®

Codes/Standards

ADA, OBC, CSA B651 compliant when installed to the specific requirements of these regulations.

ADA | CSA B651 | OBC

ASME A112.18.1/CSA B125.1
NSF/ANSI/CAN 372
NSF/ANSI/CAN 61
DOE - Energy Policy Act 1992
California Energy Commission (CEC)
ADA
ICC/ANSI A117.1
CSA B651
OBC

Technical Information

All product dimensions are nominal.

Spout

Spout Reach:	9-1/2" (241 mm)
Drain With Overflow:	[object Object]

Material

- Brass spout

Included Components

- K-7129-A Bathroom sink grid drain with overflow (QTY 1)

Required Products/Accessories

- K-13480-A AC single supply, North American outlets

or

- K-13481-A Multi-outlet power supply, North American outlets

Optional Products/Accessories

- K-99799 Undercounter thermostatic mixing valve

Technology

- Enables wireless monitoring and management when connected to KOHLER® commercial connected systems. Please contact info@kohlercortex.com for more information

Warranty

See website for detailed warranty information.

KOHLER® One-Year Limited Warranty

1-800-4KOHLER (1-800-456-4537)
Kohler Co. reserves the right to make revisions without notice to product specifications.
For the most current specification sheet, go to www.kohler.com USA or www.kohler.ca Canada.
11-19-2026 13:00 - US-CA

THE BOLD LOOK OF KOHLER.

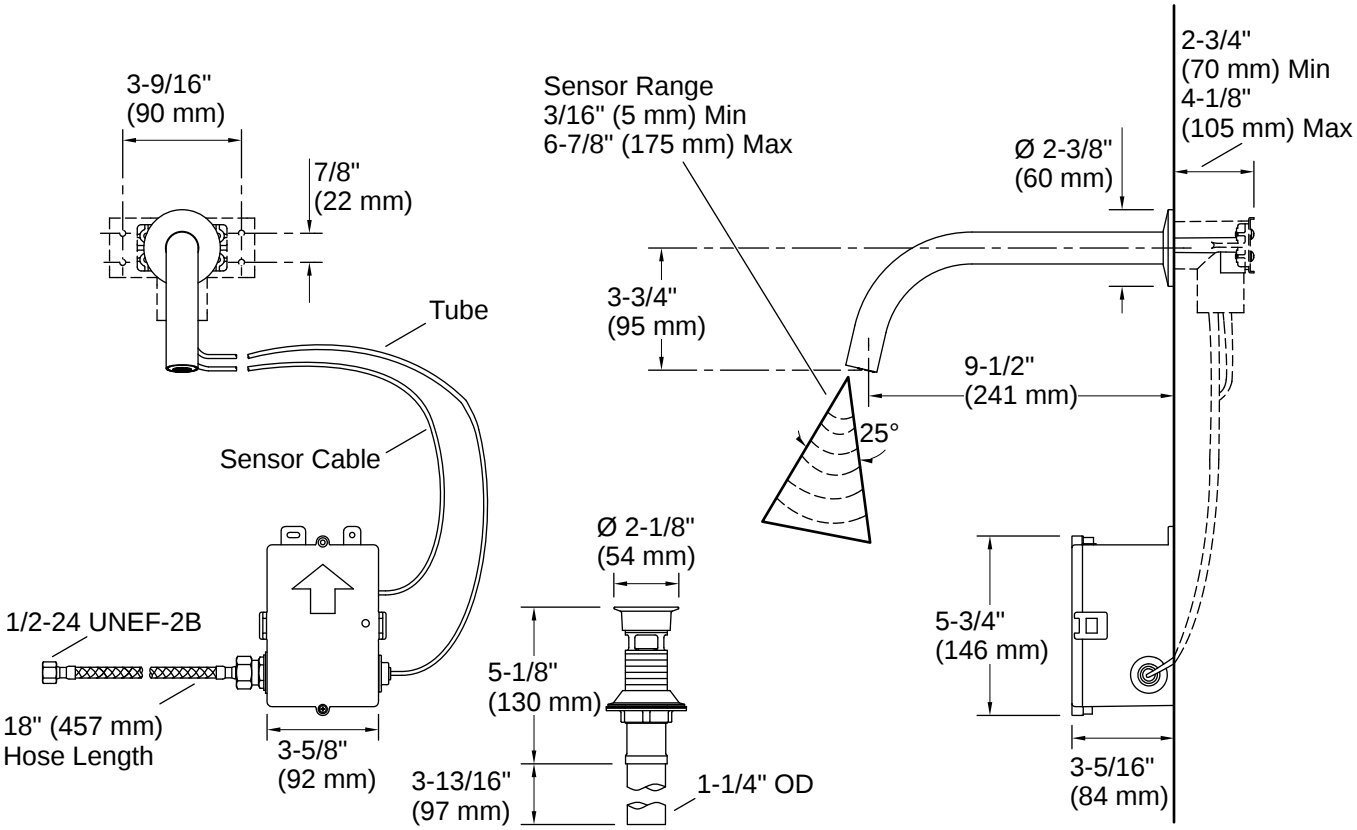

Installation

- Wall-mount

Installation Notes

Install this product according to the installation instructions.

ADA, OBC, CSA B651 compliant when installed to the specific requirements of these regulations.

1-800-4KOHLER (1-800-456-4537)
Kohler Co. reserves the right to make revisions without notice to product specifications.
For the most current specification sheet, go to www.kohler.com USA or www.kohler.ca Canada.
11-19-2026 13:00 - US-CA