Mach Flex® | K-11TH00N10

Touchless toilet flushometer, Cortex™-compatible, DC-powered, 1.28 gpf

Features

- 1.28 gpf (4.8 lpf)
- Activation distance, arming time, flush delay, and several other parameters can be adjusted by approved tech professionals using Cortex™ mobile app
- Chloramine and chlorine resistance on all rubber components exposed to waterway
- 125-micron filter protects internal components
- Locking stop cap provides protection against vandalism
- Adjustable automatic sentinel flush keeps trapway fresh while saving water
- Mechanical override enables flushometer to be used manually even during a power outage
- Powered by long-lasting energy cell to eliminate frequent battery replacement
- Patented piston technology for superior flush volume accuracy



Sustainability

WATER-SAVING DESIGN

Available Colors/Finishes

Color tiles intended for reference only.

CP Polished Chrome

1-800-4KOHLER (1-800-456-4537)
Kohler Co. reserves the right to make revisions without notice to product specifications.
For the most current specification sheet, go to www.kohler.com USA or www.kohler.ca Canada.
10-30-2026 23:01 - US-CA

THE BOLD LOOK OF KOHLER

Codes/Standards

ADA, OBC, CSA B651 compliant when installed to the specific requirements of these regulations.
This product should be used with a WaterSense labeled counterpart with the same rated flush volume to ensure the complete system meets the requirements of this specification for water efficiency and performance.

ADA | CSA B651 | OBC

ASSE 1037/ASME A112.1037/CSA B125.37
EPA WaterSense®
ADA
ICC/ANSI A117.1
CSA B651
OBC

Pressure/Fixture Supply Requirements

Minimum Flowing Pressure:	25 psi (172.4 kPa)
Minimum Flow Rate:	25 gpm (94.6 l/min)

Material

- Durable brass construction

Recommended Products/Accessories

- K-23723 Faucet cleaner
- 1421939 Extension Kit
- 1509698 Assembly, Fv Pressure Gauge, 1/8"

Technology

- Flex sensing technology provides accurate activation and flexible adjustability of several different parameters by approved tech professionals using Cortex™ mobile app or Cortex-connected ecosystem
- Connects wirelessly to KOHLER® commercial connected systems (sold separately), or by approved tech professionals to Cortex™ mobile app for individual adjustment. Please contact info@kohlercortex.com for more information

Connectivity

Bluetooth®

The BLUETOOTH® word mark and logos are registered trademarks owned by Bluetooth SIG, Inc. and any use of such marks by Kohler Co. is under license.

Warranty

See website for detailed warranty information.

KOHLER® One-Year Limited Warranty

1-800-4KOHLER (1-800-456-4537)
Kohler Co. reserves the right to make revisions without notice to product specifications.
For the most current specification sheet, go to www.kohler.com USA or www.kohler.ca Canada.
10-30-2026 23:01 - US-CA

THE BOLD LOOK OF KOHLER.

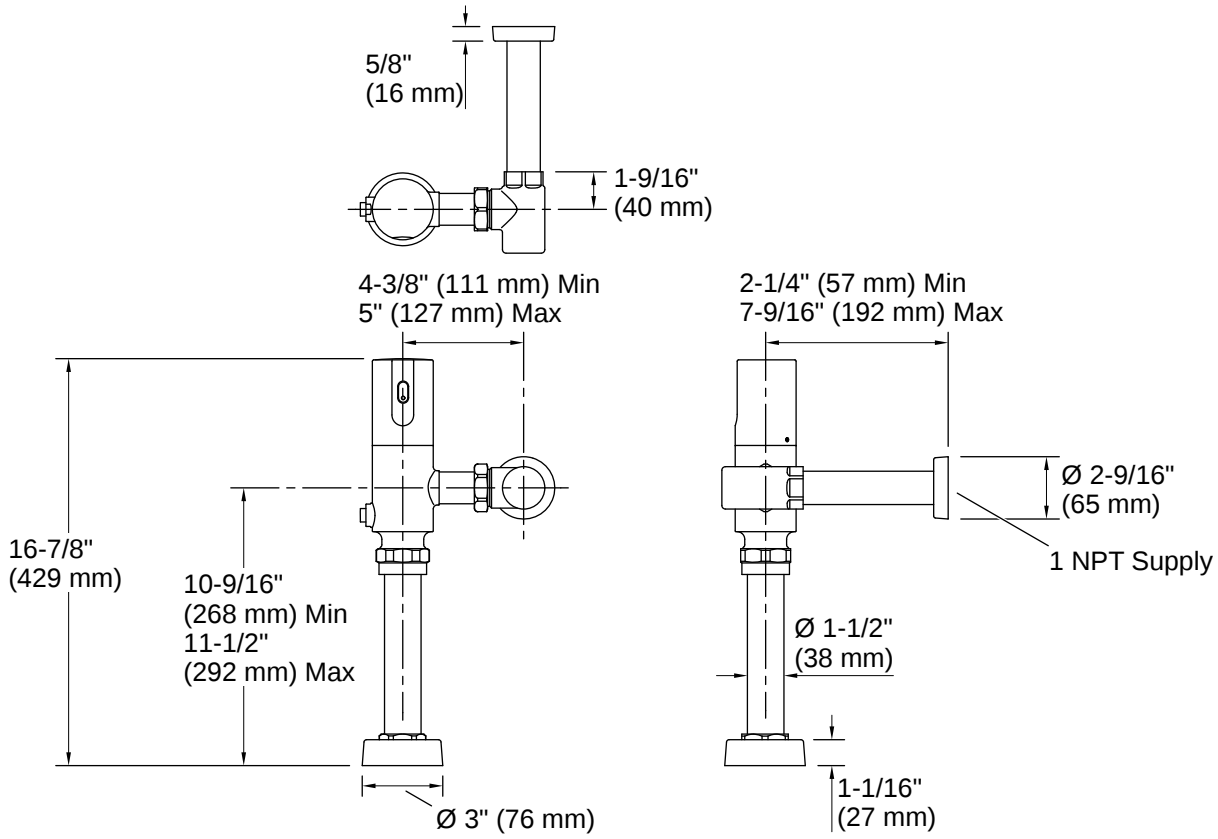

Installation

- Intended for toilet installations with 1-1/2" (38 mm) top spud coupling connection

Installation Notes

Install this product according to the installation instructions.

This product should be used with a WaterSense labeled counterpart with the same rated flush volume to ensure the complete system meets the requirements of this specification for water efficiency and performance.
ADA, OBC, CSA B651 compliant when installed to the specific requirements of these regulations.

1-800-4KOHLER (1-800-456-4537)
Kohler Co. reserves the right to make revisions without notice to product specifications.
For the most current specification sheet, go to www.kohler.com USA or www.kohler.ca Canada.
10-30-2026 23:01 - US-CA

THE BOLD LOOK OF KOHLER