Purist® | K-11892

18'' grab bar

Features

- Coordinates with other products in the Purist collection



Available Colors/Finishes

Color tiles intended for reference only.

	S	Polished Stainless
	SN	Vibrant Polished Nickel
	AF	Vibrant French Gold
	BN	Vibrant Brushed Nickel
	BS	Brushed Stainless
	BV	Vibrant Brushed Bronze
	BL	Matte Black
	2MB	Vibrant Brushed Moderne Brass
	TT	Vibrant Titanium

1-800-4KOHLER (1-800-456-4537)
Kohler Co. reserves the right to make revisions without notice to product specifications.
For the most current specification sheet, go to www.kohler.com USA or www.kohler.ca Canada.
11-09-2026 18:38 - US-CA

Codes/Standards

ADA compliant when installed to the specific requirements of these regulations.

ADA

ADA
ICC/ANSI A117.1

Material

- Premium metal construction for durability and reliability
- KOHLER finishes resist corrosion and tarnishing

Recommended Products/Accessories

- K-23723 Faucet cleaner

Warranty

See website for detailed warranty information.

KOHLER® Faucet Lifetime Limited Warranty

1-800-4KOHLER (1-800-456-4537)
Kohler Co. reserves the right to make revisions without notice to product specifications.
For the most current specification sheet, go to www.kohler.com USA or www.kohler.ca Canada.
11-09-2026 18:38 - US-CA

THE BOLD LOOK OF KOHLER.

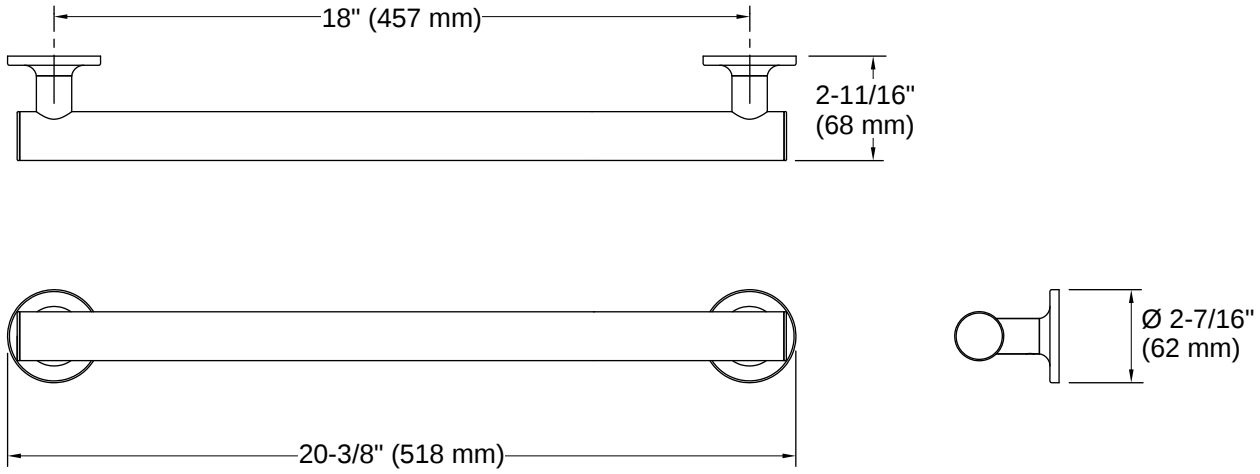

Installation

- Installation template and tools included

Installation Notes

Install this product according to the installation instructions.

Measure your actual product for roughing-in details.
WARNING: Risk of personal injury. The wall plates on the grab bar must be mounted to a brace between the wall studs. This will ensure that the weight of the user is adequately supported.
ADA compliant when installed to the specific requirements of these regulations.

1-800-4KOHLER (1-800-456-4537)
Kohler Co. reserves the right to make revisions without notice to product specifications.
For the most current specification sheet, go to www.kohler.com USA or www.kohler.ca Canada.
11-09-2026 18:38 - US-CA

THE BOLD LOOK OF KOHLER.