# Rite-Temp® | K-11748-K

1/2" pressure-balancing valve with push-button diverter

## Features

- Rite-Temp® pressure-balancing diaphragm design
- Pressure-balancing mechanism of one-piece diaphragm cartridge design for ease of maintenance
- Mixing valve cycles from "cold" to "hot"
- Integral diverter mechanism
- High-temperature limit setting for added safety
- Less screwdriver stops
- Designed for showerhead and handshower applications



## Available Colors/Finishes

***Color tiles intended for reference only.***

NA NA Not Applicable



1-800-4KOHLER (1-800-456-4537)
Kohler Co. reserves the right to make revisions without notice to product specifications.
For the most current specification sheet, go to www.kohler.com USA or www.kohler.ca Canada.
11-05-2026 11:00 - US-CA

## Codes/Standards

ASME A112.18.1/CSA B125.1
ASSE 1016/ASME A112.1016/CSA B125.16

## Valves

| | |
|---|---|
| Included Valves: | Diverter, Pressure Balance |

### Shower Valve

| | |
|---|---|
| Flow Rate Maximum @ 45 psi: | 0.45 gpm (1.7 l/min) |
| Manufacturer's Minimum Rated Flow: | 1.5 gpm (5.7 l/min) |
| Pressure: | 45 psi (3.1 bar) |
| Maximum Static Pressure: | 125 psi (8.6 bar) |
| Minimum Operating Pressure: | 20 psi (1.4 bar) |

## Material

- Brass valve bodies

## Warranty

***See website for detailed warranty information.***

KOHLER® Faucet Lifetime Limited Warranty



1-800-4KOHLER (1-800-456-4537)
Kohler Co. reserves the right to make revisions without notice to product specifications.
For the most current specification sheet, go to www.kohler.com USA or www.kohler.ca Canada.
11-05-2026 11:00 - US-CA

THE BOLD LOOK OF KOHLER.

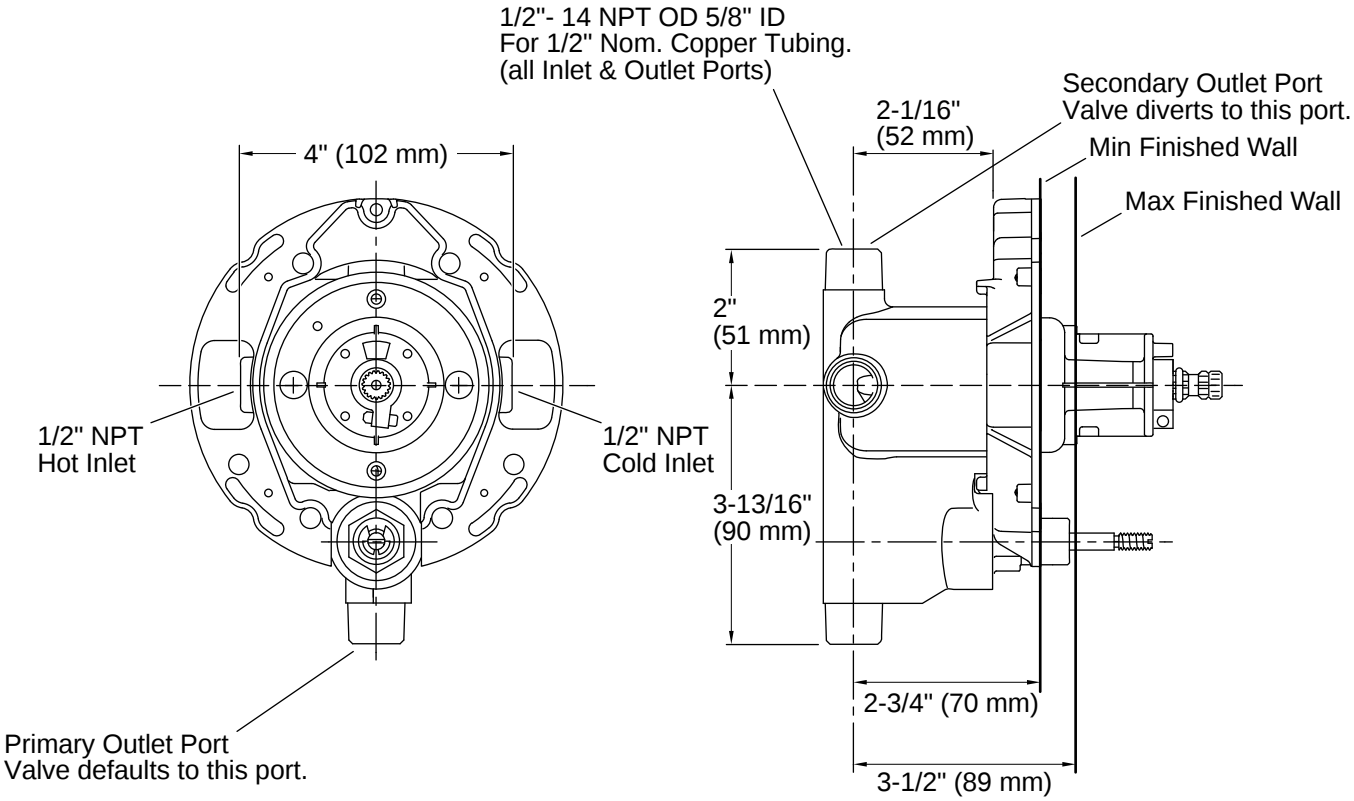


## Installation Notes

***Install this product according to the installation instructions.***

For use with showerheads or handsprays rated at 1.5 gal/min (5.7 l/min) or higher.



1-800-4KOHLER (1-800-456-4537)
Kohler Co. reserves the right to make revisions without notice to product specifications.
For the most current specification sheet, go to www.kohler.com USA or www.kohler.ca Canada.
11-05-2026 11:00 - US-CA

THE BOLD LOOK OF KOHLER