Swiftflo™ | K-11677

Adjustable drain, 20-gauge brass, for 18-1/2" to 20-1/2" baths

Features

- Brass tailpiece
- 1-1/2" (38 mm) connection
- Adjustable trip lever
- Removable grid strainer



Available Colors/Finishes

Color tiles intended for reference only.

CP Polished Chrome

1-800-4KOHLER (1-800-456-4537)
Kohler Co. reserves the right to make revisions without notice to product specifications.
For the most current specification sheet, go to www.kohler.com USA or www.kohler.ca Canada.
11-12-2026 11:13 - US-CA

Codes/Standards

ASME A112.18.2/CSA B125.2

Recommended Products/Accessories

- [object Object]23726 Drain treatment
- K-23723 Faucet cleaner

Warranty

See website for detailed warranty information.

KOHLER® One-Year Limited Warranty

1-800-4KOHLER (1-800-456-4537)
Kohler Co. reserves the right to make revisions without notice to product specifications.
For the most current specification sheet, go to www.kohler.com USA or www.kohler.ca Canada.
11-12-2026 11:13 - US-CA

THE BOLD LOOK OF KOHLER.

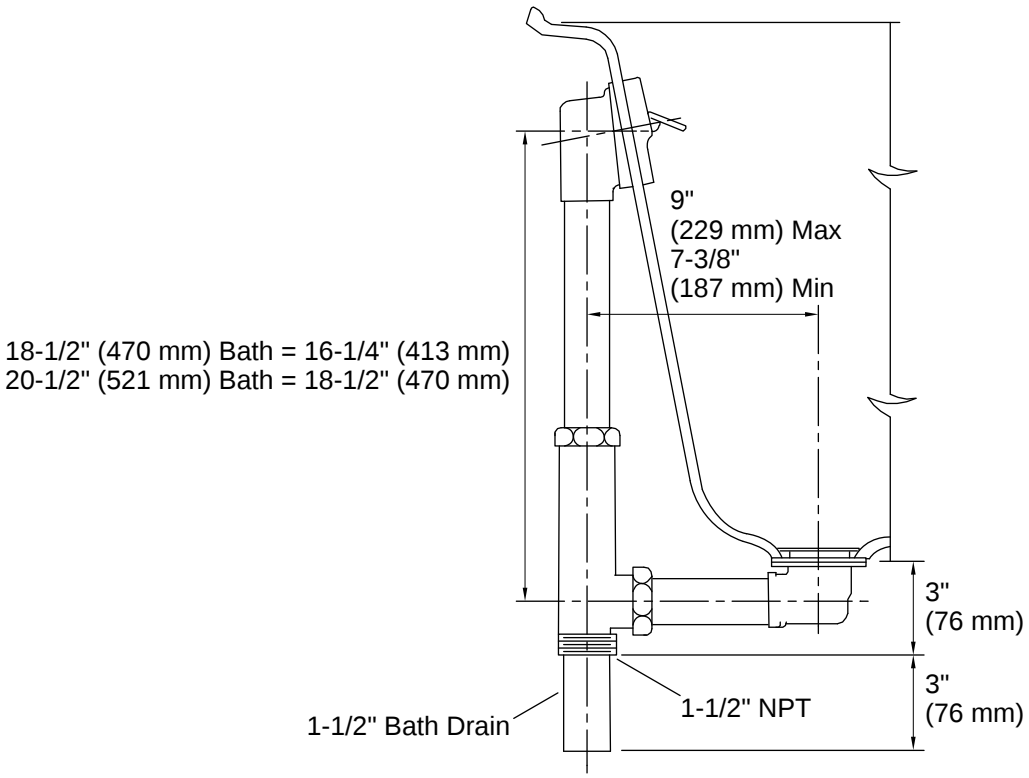

Installation

- For through-the-floor installations
- For 18-1/2" (470 mm) to 20-1/2" (521 mm) deep bath installations

Installation Notes

Install this product according to the installation instructions.

1-800-4KOHLER (1-800-456-4537)
Kohler Co. reserves the right to make revisions without notice to product specifications.
For the most current specification sheet, go to www.kohler.com USA or www.kohler.ca Canada.
11-12-2026 11:13 - US-CA

THE BOLD LOOK OF KOHLER