Archer® | K-11069

Trip lever

Features

- For use with Archer one- and two-piece toilets
- Coordinates with other products in the Archer collection



Available Colors/Finishes

Color tiles intended for reference only.

	SN	Vibrant Polished Nickel
	AF	Vibrant French Gold
	BN	Vibrant Brushed Nickel
	BV	Vibrant Brushed Bronze
	BL	Matte Black
	2MB	Vibrant Brushed Moderne Brass
	TT	Vibrant Titanium

1-800-4KOHLER (1-800-456-4537)
Kohler Co. reserves the right to make revisions without notice to product specifications.
For the most current specification sheet, go to www.kohler.com USA or www.kohler.ca Canada.
11-18-2026 00:13 - US-CA

Codes/Standards

ADA, OBC, CSA B651 compliant when installed to the specific requirements of these regulations.

ADA CSA B651 OBC

ASME A112.18.1/CSA B125.1
ADA
ICC/ANSI A117.1
CSA B651
OBC

Material

- Premium metal construction for durability and reliability
- KOHLER finishes resist corrosion and tarnishing

Recommended Products/Accessories

- K-23723 Faucet cleaner
- K-3551 Two-piece elongated toilet, 1.28 gpf
- K-4431 Toilet tank, 1.28 gpf

Warranty

See website for detailed warranty information.

KOHLER® One-Year Limited Warranty

1-800-4KOHLER (1-800-456-4537)
Kohler Co. reserves the right to make revisions without notice to product specifications.
For the most current specification sheet, go to www.kohler.com USA or www.kohler.ca Canada.
11-18-2026 00:13 - US-CA

THE BOLD LOOK OF KOHLER®

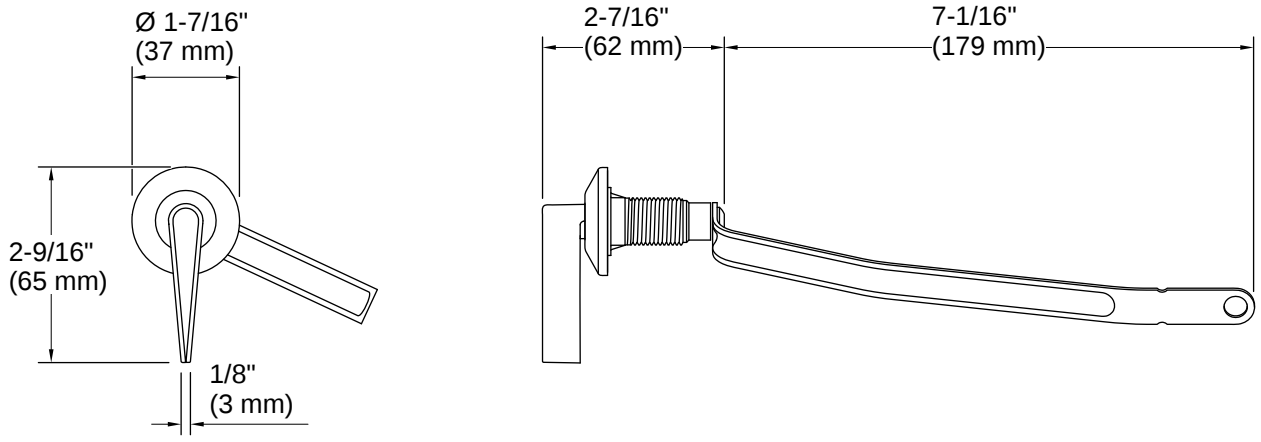

Installation Notes

Install this product according to the installation instructions.

ADA, OBC, CSA B651 compliant when installed to the specific requirements of these regulations.

1-800-4KOHLER (1-800-456-4537)
Kohler Co. reserves the right to make revisions without notice to product specifications.
For the most current specification sheet, go to www.kohler.com USA or www.kohler.ca Canada.
11-18-2026 00:13 - US-CA

THE BOLD LOOK OF KOHLER