KOHLER®

Antique | K-106

Bath drain, chain and rubber stopper

Features

- Includes brass tee and pipe
- Through-the-floor installation
- For use with K-100 Birthday Bath®



Available Colors/Finishes

Color tiles intended for reference only.

	CP	Polished Chrome
	SN	Vibrant Polished Nickel
	AF	Vibrant French Gold
	BN	Vibrant Brushed Nickel
	BV	Vibrant Brushed Bronze
	BL	Matte Black
	2MB	Vibrant Brushed Moderne Brass
	TT	Vibrant Titanium

1-800-4KOHLER (1-800-456-4537)
Kohler Co. reserves the right to make revisions without notice to product specifications.
For the most current specification sheet, go to www.kohler.com USA or www.kohler.ca Canada.
11-08-2026 22:08 - US-CA

THE BOLD LOOK OF KOHLER®

Codes/Standards

ASME A112.18.2/CSA B125.2

Material

- Solid-brass construction for durability and reliability

Recommended Products/Accessories

- [object Object]23726 Drain treatment
- K-23723 Faucet cleaner

Warranty

See website for detailed warranty information.

KOHLER® One-Year Limited Warranty

1-800-4KOHLER (1-800-456-4537)
Kohler Co. reserves the right to make revisions without notice to product specifications.
For the most current specification sheet, go to www.kohler.com USA or www.kohler.ca Canada.
11-08-2026 22:08 - US-CA

THE BOLD LOOK OF KOHLER.

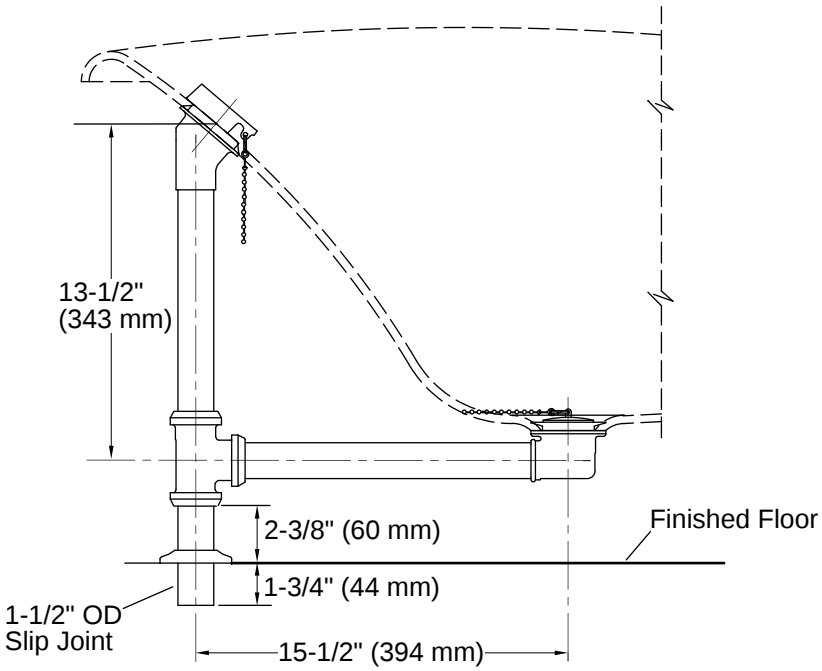

Installation Notes

Install this product according to the installation instructions.

Measure your actual product for roughing-in details.

1-800-4KOHLER (1-800-456-4537)
Kohler Co. reserves the right to make revisions without notice to product specifications.
For the most current specification sheet, go to www.kohler.com USA or www.kohler.ca Canada.
11-08-2026 22:08 - US-CA

THE BOLD LOOK OF KOHLER.