Bancroft® | K-10590-AK

Single-function showerhead, 2.5 gpm

Features

- Single-function showerhead with 66 nozzle 5-15/16" (151 mm) diameter sprayface
- Optimized sprayface for maximum performance
- MasterClean™ sprayface features an easy-to-clean surface that withstands mineral buildup and maximizes spray performance
- 2.5 gpm (9.5 lpm) maximum flow rate



DISCONTINUED

1-800-4KOHLER (1-800-456-4537)
Kohler Co. reserves the right to make revisions without notice to product specifications.
For the most current specification sheet, go to www.kohler.com USA or www.kohler.ca Canada.
11-12-2026 02:04 - US-CA

Codes/Standards

ASME A112.18.1/CSA B125.1
DOE - Energy Policy Act 1992

Technical Information

All product dimensions are nominal.

Flow Rate

Shower/Rainhead Rated Maximum Flow:	2.5 gpm (9.5 l/min)

Recommended Products/Accessories

- K-23723 Faucet cleaner
- K-7397 Shower arm and flange,7-1/2" long

Technology

- Katalyst® air-induction technology infuses water with air, creating bigger drops for a more powerful spray

Warranty

See website for detailed warranty information.

KOHLER® Faucet Lifetime Limited Warranty

DISCONTINUED

1-800-4KOHLER (1-800-456-4537)
Kohler Co. reserves the right to make revisions without notice to product specifications.
For the most current specification sheet, go to www.kohler.com USA or www.kohler.ca Canada.
11-12-2026 02:04 - US-CA

THE BOLD LOOK OF KOHLER.

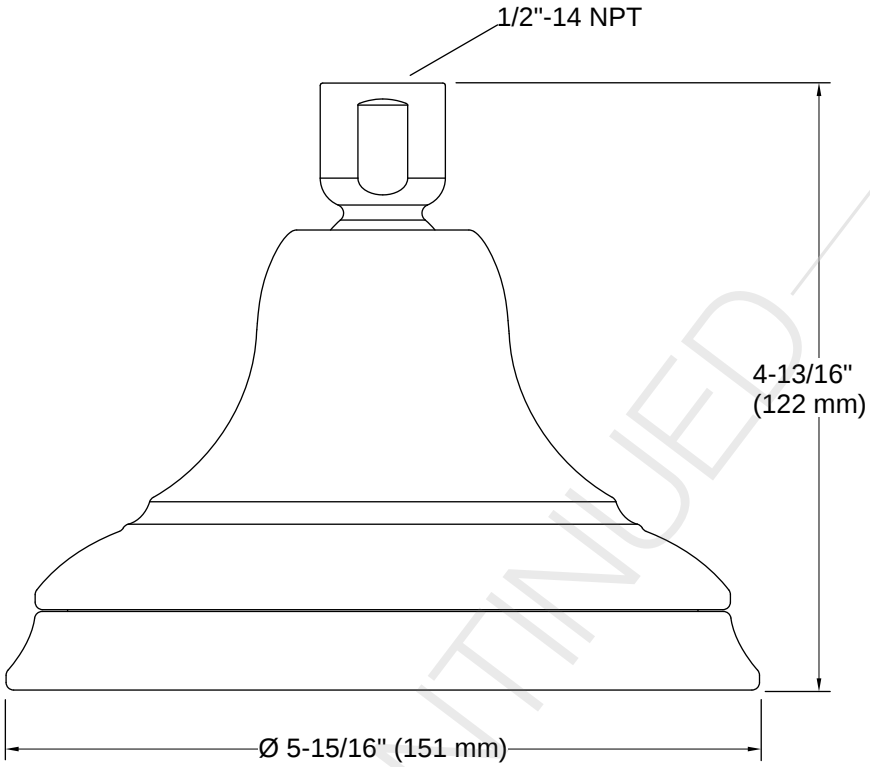

DISCONTINUED

Installation

- 1/2" -14 NPT connection

Installation Notes

Install this product according to the installation instructions.

1-800-4KOHLER (1-800-456-4537)
Kohler Co. reserves the right to make revisions without notice to product specifications.
For the most current specification sheet, go to www.kohler.com USA or www.kohler.ca Canada.
11-12-2026 02:04 - US-CA

THE BOLD LOOK OF KOHLER.