Traditional | K-10542

24" grab bar

Features

- The Oil-Rubbed Bronze finish on this product does not include copper highlights as shown



Available Colors/Finishes

Color tiles intended for reference only.

	S	Polished Stainless
	SN	Vibrant Polished Nickel
	AF	Vibrant French Gold
	BN	Vibrant Brushed Nickel
	BV	Vibrant Brushed Bronze
	BL	Matte Black
	2MB	Vibrant Brushed Moderne Brass

1-800-4KOHLER (1-800-456-4537)
Kohler Co. reserves the right to make revisions without notice to product specifications.
For the most current specification sheet, go to www.kohler.com USA or www.kohler.ca Canada.
11-18-2026 00:18 - US-CA

Codes/Standards

ADA compliant when installed to the specific requirements of these regulations.

ADA

ADA
ICC/ANSI A117.1

Material

- Premium metal construction for durability and reliability
- KOHLER finishes resist corrosion and tarnishing

Recommended Products/Accessories

- K-23723 Faucet cleaner

Warranty

See website for detailed warranty information.

KOHLER® Faucet Lifetime Limited Warranty

1-800-4KOHLER (1-800-456-4537)
Kohler Co. reserves the right to make revisions without notice to product specifications.
For the most current specification sheet, go to www.kohler.com USA or www.kohler.ca Canada.
11-18-2026 00:18 - US-CA

THE BOLD LOOK OF KOHLER.

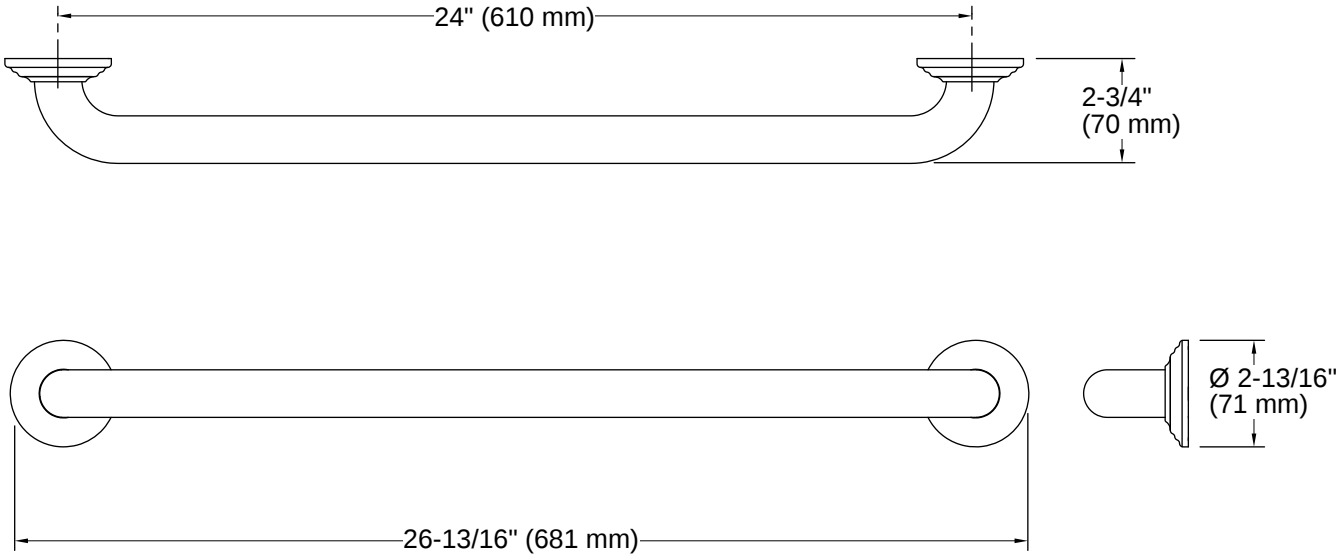

Installation

- Installation template and tools included

Installation Notes

Install this product according to the installation instructions.

Measure your actual product for roughing-in details.
WARNING: Risk of personal injury. The wall plates on the grab bar must be mounted to a brace between the wall studs. This will ensure that the weight of the user is adequately supported.
ADA compliant when installed to the specific requirements of these regulations.

1-800-4KOHLER (1-800-456-4537)
Kohler Co. reserves the right to make revisions without notice to product specifications.
For the most current specification sheet, go to www.kohler.com USA or www.kohler.ca Canada.
11-18-2026 00:18 - US-CA

THE BOLD LOOK OF KOHLER.